8.2 ACER_LCD_P195HQL_SCHEMATICS _POWER BOARD

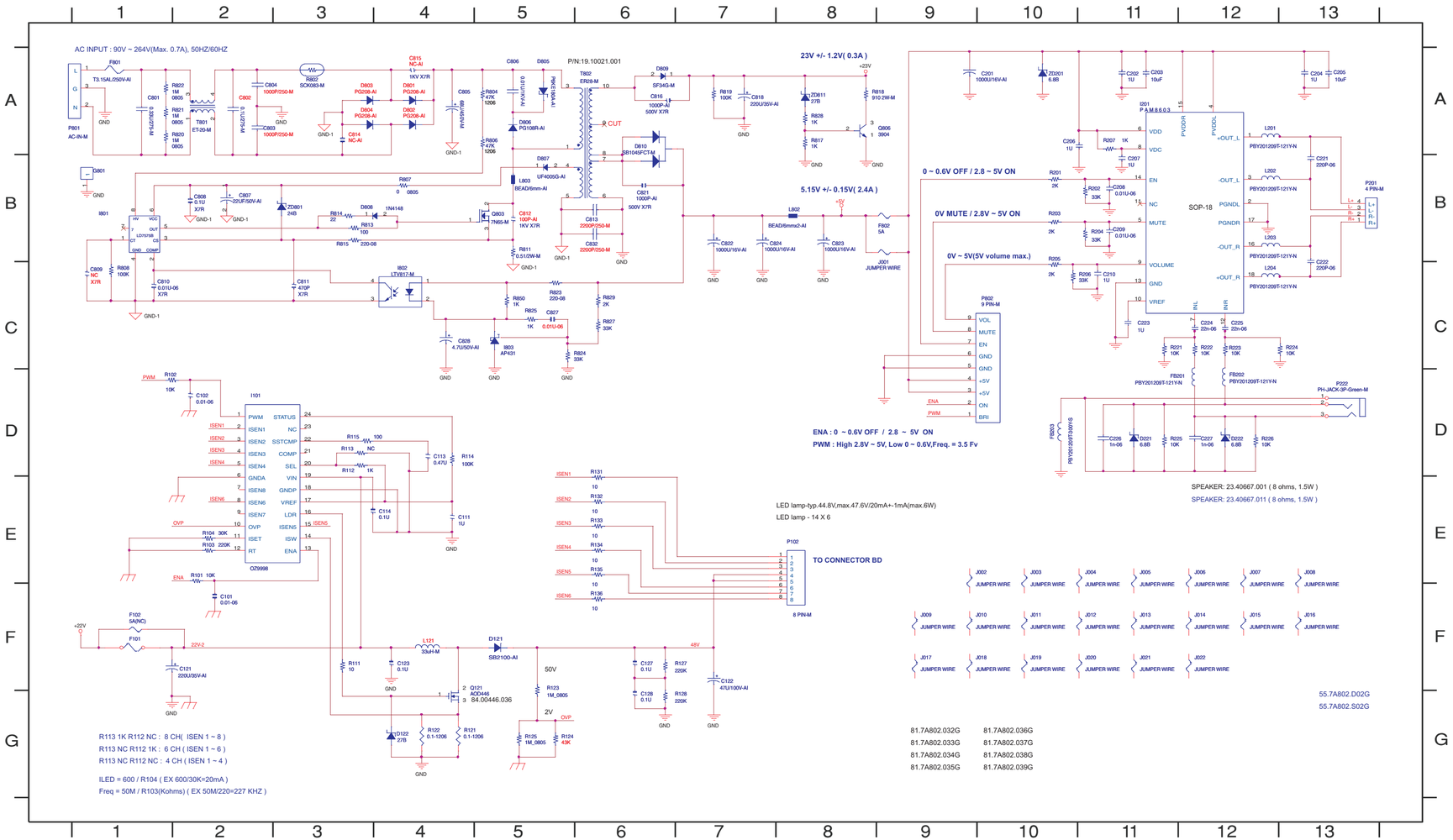

PCB No. 48.7A803.011

8.7 ACER_LCD_P195HQL_LAYOUTS_POWER BOARD

POWER BOARD - TOP SILK

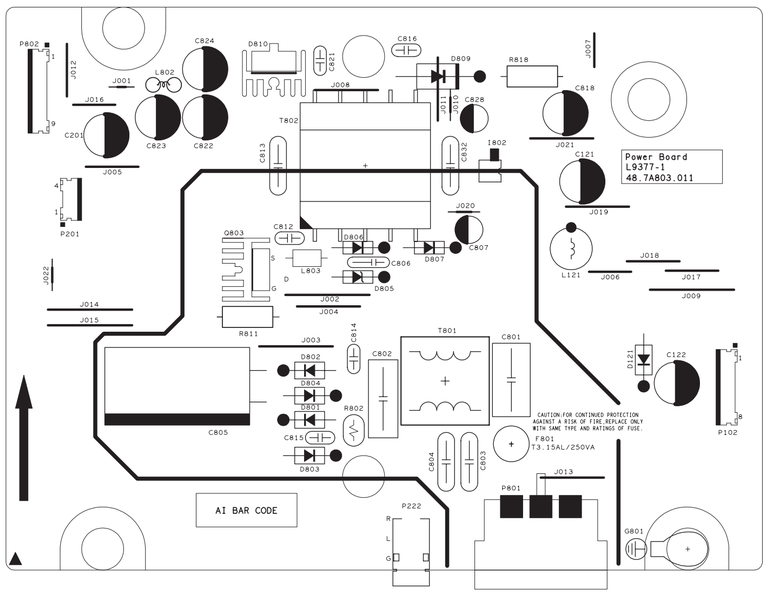

POWER BOARD - BOTTOM SILK

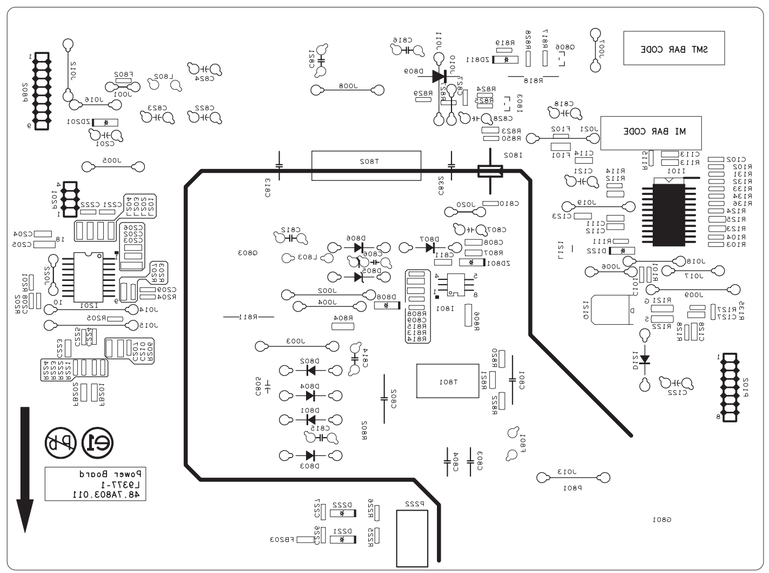

PCB No. 48.7A803.011